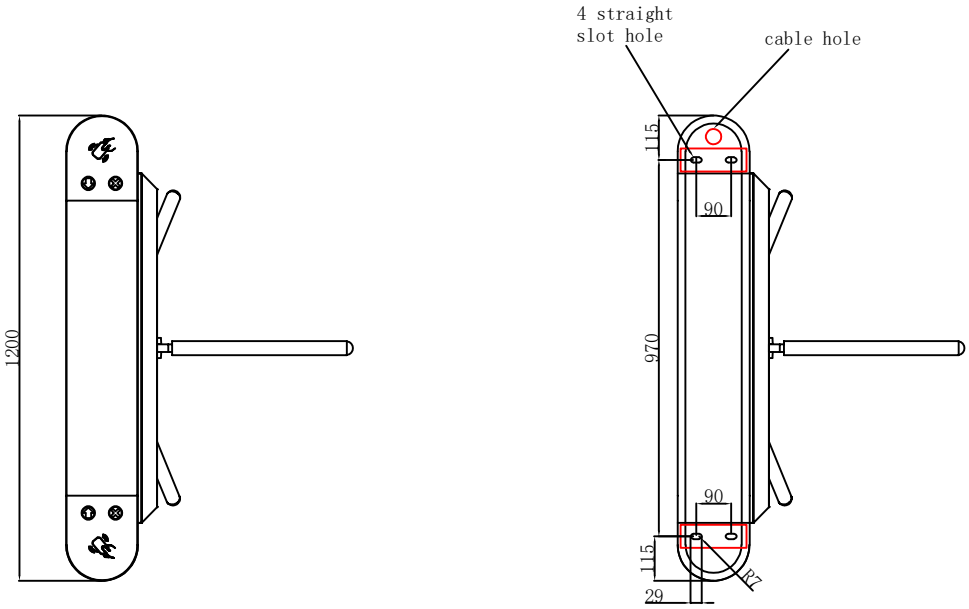

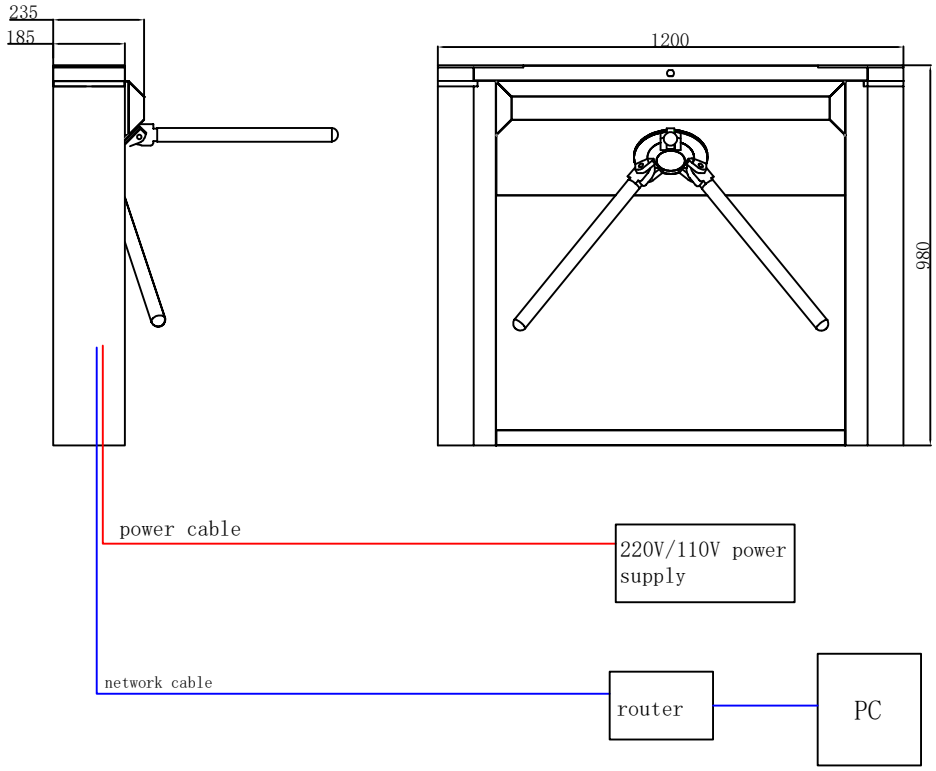

1.Embed 40mm PVC conduit for threading wires.
2.Power cable specifications: 1.5 square millimeter three-core cable (including ground wire), extending 2 meters from the conduit opening.
3.Communication network cable specifications: Category 5e network cable/Category 6 network cable.
4.Expansion screw specifications: 10mm - 12mm.