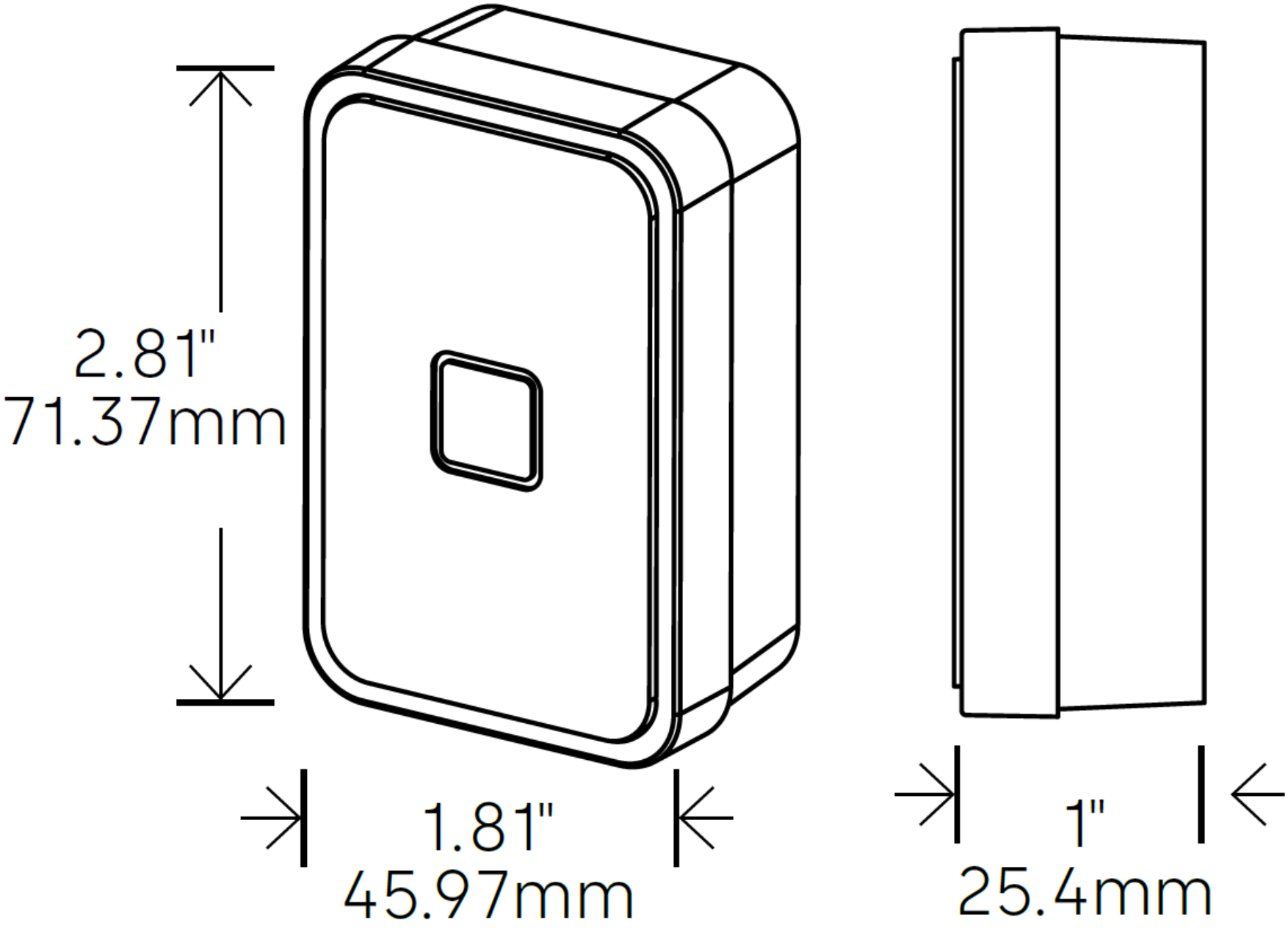
2.81"
71.37mm
1.81"
45.97mm
1"
25.4mm