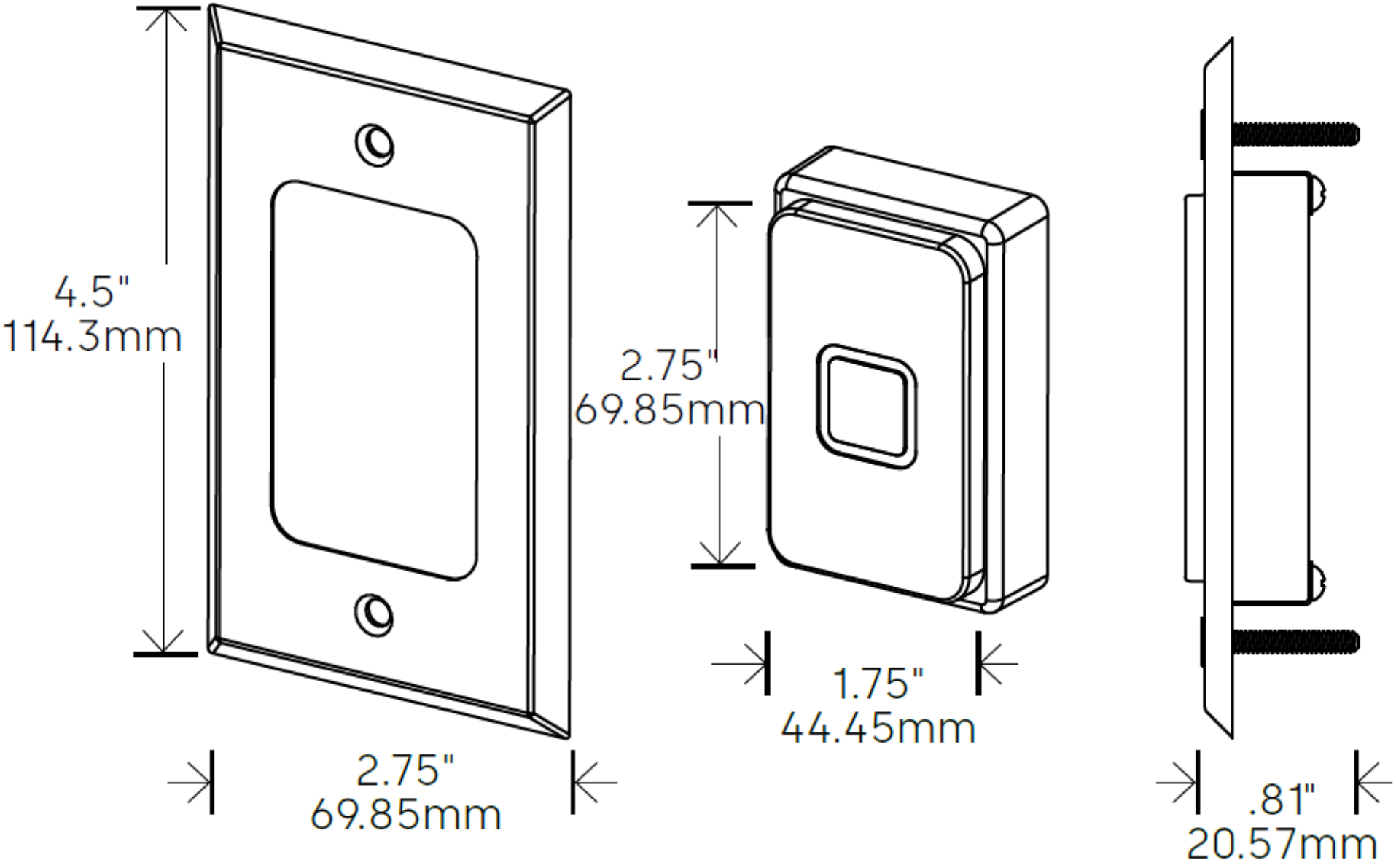
4.5"
114.3mm
2.75"
69.85mm
2.75"
69.85mm
1.75"
44.45mm
.81"
20.57mm