CAMEL SECURITY

Supplier of access control products

Touchless Surface Mount Exit Button

Model: K3

Surface Mount No Touch Exit Button;
NO/NC/COM;
Sensitive Distance Adjustable 5-20cm;
Time Delay Adjustable 0~30s;
LED indicator color can be customized;
Customizable outdoor waterproof function (K3-W);
ABS material.



Features:

- Wide Voltage DC 12~24V
- NO/NC/COM
- No Touch Style Exit Button
- Standby Red LED, Response Green LED
- 5-20cm Induction distance adjustable
- 0-30s delay control adjustment



View	Front (Standby)	Front (Response)	Side	Standard Back (K3)	Waterproof Back (K3-W)
Photos					

Product Parameter

Model	K3
Size(mm)	86L*55W*20H
Weight(KG)	0.072
Power Supply	DC12-24V
Output Contact	NO/NC/COM
Sensitive Distance	5-20cm is adjustable （Customized）
Time Delay	0-30s is adjustment （Customized）

LED Indicator	Standby red, Response green. (Customized)
Material	ABS
Panel logo	Customizable
Mechanical Life	500,000 Tested aging test qualified
Operating Temp	-20℃～+55℃(-4-131F)
Operating humidity	0-95% (RH)
Package Quantity	1 PCS/box, 100 PCS/case.

Dimensions

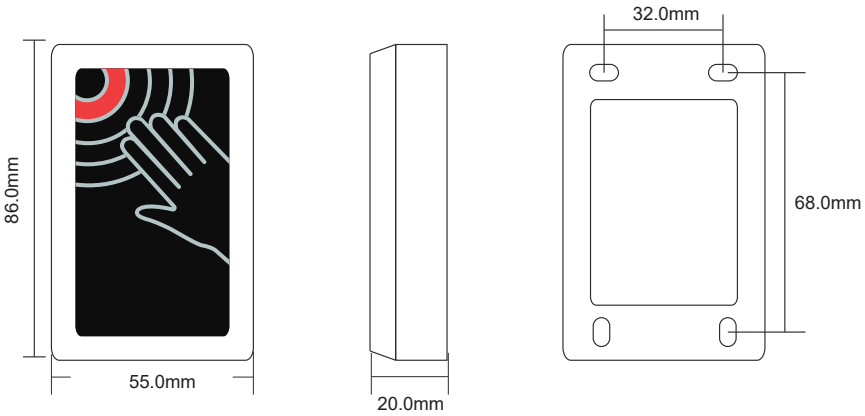

Customized plate is available.

Model	K3		K4	
Pattern	LED Color Customized	LOGO Customized	LED Color Customized	LOGO Customized
Photos				

Switch operation instructions

Wiring instructions	Adjustable range	Time delay adjustment
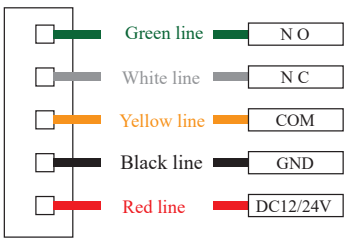	 D Potentiometers Turn left near (Counterclockwise) Turn right far (Clockwise)	 T potentiometer Turn left short (Counterclockwise) Turn right long (Clockwise)